0 601 528 001

Stand / Issue ~~07-06~~ 06-11-15

Fig./Abb. 1

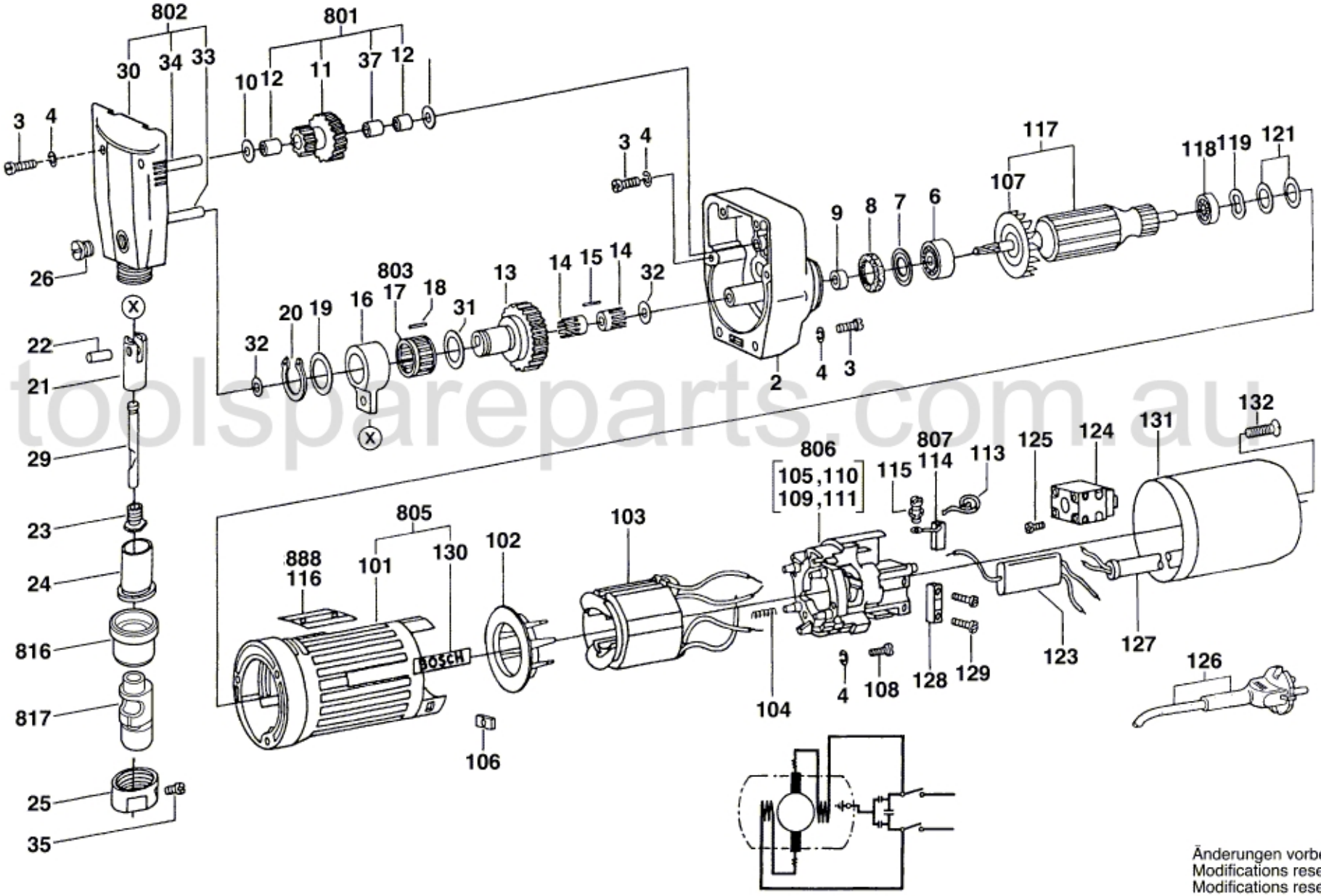

toolsparereparts.com.au

Änderungen vorbehalten
Modifications reserved
Modifications reservees
Salvo modificaciones